ENC305-FN

5MP Network Fisheye Camera

Key features

- Up to 5MP High Resolution
- Full 2560 × 1920 @30 fps
- H.265+, H.265, H.264+, H.264
- 14 Display Modes Supported
- Field of View: Horizontal 180°, Vertical 180°
- 120 dB Wide Dynamic Range
- 3D Digital Noise Reduction
- 12 VDC & PoE (802.3af)
- EXIR 2.0 with up to 30 ft (8 m) IR range
- MicroSD card slot supports up to 128 GB
- Audio and Alarm Inputs and Outputs

Specifications

ENC305-FN	
Camera	
Image Sensor	1/2.5" Progressive Scan CMOS
Min. Illumination	Color: 0.01Lux @ (F1.2, AGC ON), 0 Lux with IR on
Shutter Speed	1/3 s to 1/100,000 s
Lens	1.05 mm @ F2.2, horizontal field of view: 180°, vertical field of view: 180°
Lens Mount	M12
Day &Night	IR cult filter with auto switch
DNR	3D DNR
Wide Dynamic Range	120 dB
Compression Standard	
Video Compression	Main stream: H.265/H.264 Sub stream: H.265/H.264/MJPEG
H.264 Type	Main Profile/High Profile
H.264+	Support

H.265 Type	Main Profile
H.265+	Support
Video Bit Rate	32 Kbps to 16 Mbps
Audio Compression (-S)	G.711/G.722.1/G.726/MP2L2
Audio Bit Rate (-S)	64Kbps(G.711)/16Kbps(G.722.1)/16Kbps(G.726)/32-128Kbps(MP2L2)
Image	
Max. Resolution	2560 × 1920
Main Stream Max. Frame Rate	50Hz: 25fps (2560 × 1920, 2048 × 1536, 1280 × 960) 60Hz: 30fps (2560 × 1920, 2048 × 1536, 1280 × 960)
Sub Stream Max. Frame Rate	50Hz: 25fps (352× 288, 704 × 576) 60Hz: 30fps (352 × 240, 704 × 576)
Image Settings	Saturation, brightness, contrast, and sharpness are adjustable via client software or web browser
Image Enhancement	WDR/3D DNR/Backlight Compensation/Defog
Day/Night Switch	Auto/Schedule/Triggered by Alarm In (-S model supports)
Region of Interest	Support 1 fixed region for each stream
Lens Distortion Correction	Support
Target Cropping	Support
Live View Display	
Mount Type	Support 1 fixed region for main stream and sub stream
Display Mode	Support 14 display modes in total (including display modes of different mount types): Fisheye View, 180 Panorama View, 4PTZ, Fisheye + 3PTZ, 360 Panorama View, 360 Panorama + PTZ, 360 Panorama + 3PTZ, 360 Panorama + 6PTZ, 360 Panorama + 8PTZ, 2PTZ, Fisheye + 8PTZ, Panorama View, Panorama + 3PTZ, Panorama + 8PTZ
Audio (-S)	
Image Settings	Support
Image Settings	Support
Image Enhancement	Max. 48kHz
Network	
Network Storage	NAS (Support NFS,SMB/CIFS), built-in microSD/SDHC/SDXC card slot, up to 128 G, ANR
Alarm Trigger	Motion detection, dynamic analysis, intrusion detection, line crossing detection
Detection	Support Micro SD/SDHC/SDXC card (128G),local storage and NAS (NFS,SMB/CIFS), ANR
Protocols	TCP/IP, ICMP, HTTP, HTTPS, FTP, DHCP, DNS, DDNS, RTP, RTSP, RTCP, PPPoE, NTP, UPnP, SMTP, SNMP, IGMP, 802.1X, QoS, IPv6
Standard	ONVIF (PROFILE S, PROFILE G), PSIA, CGI, ISAPI
General Function	One-key reset, anti-flicker, fassword protection, privacy mask, IP Address filtering, heartbeat, watermark
Interface	
Communication Interface	1 RJ45 10M/100M self-adaptive Ethernet port
Audio (-S)	1 audio input (line in), 1 audio output interface
Alarm (-S)	1 alarm input, 1 alarm output (DC24V, 1A or AC110V, 500mA, max.)
On-board Storage	Built-in microSD/SDHC/SDXC slot, up to 128 G
General	
Operating Conditions	-10 °C to +50 °C (-14 °F to +122 °F), Humidity 95% or less (non-condensing)
Power Supply	DC 12V ± 25%, 2A, 5W PoE(802.3af 36-57V, class 3), 0.4 – 0.7 A, 6.7W
IR Range	Up to 8 m
Dimensions	Φ 119.9 × 41.2 mm (Φ 4.72″× 1.62″)
Weight	600 g (1.32 lbs.)
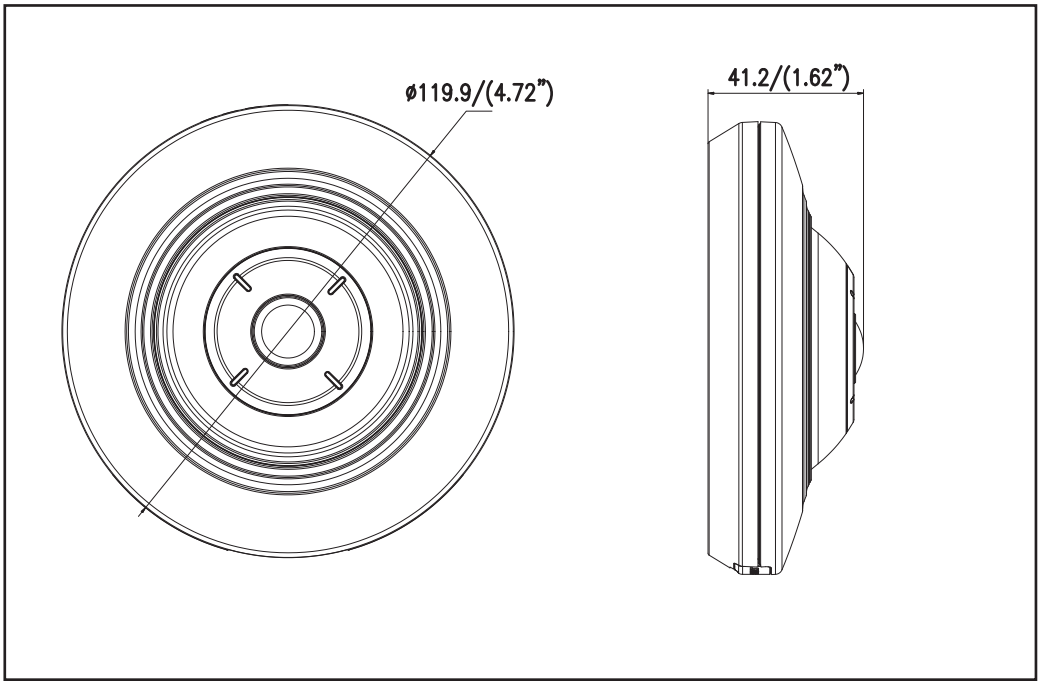
Dimensions